NO	PART NAME	Q'TY	MATERIAL	NOTE	PART NO.
03	REAR CASING	1	PPG	ø240X141	1005210331
02-5	SLEEVE	2	SUS304	ø20X21.5	
02-4	SLEEVE	6	SUS304	ø20X50	
02-3	RELIEF PLATE	1	FC-20	ø261X12	
02-2	FLANGE	1	PPG	65A	1003912314
02-1	FLANGE	1	PPG	80A	1003912315
02	FRONT CASING	1	PPG	ø261X148	1003212300
01-1	TRANSITION FLANGE	1	FC-20	ø228.6X18	
01	BRACKET	1	FC-20	ø261X208	1003210806

NO	PART NAME	Q'TY	MATERIAL	NOTE	PART NO.
09	O. RING	1	FKM	G220	1003012777
08	BACK UP RING	1	SPCC	ø209X5.5	1006512300
07	INNER DRIVE RING	1	PPG	ø79.6X124	
06	BEARING ASS'Y	1	CERAMIC	ø44X46.5	1003210803
			CARBON		1003210801
			RULON		1003210802
05-1	RING	1	S45C	ø48X9.8	
05	OUTER DRIVE RING	1	FCD-45	ø122X205	1003210807
04	IMPELLER ASS'Y	1	PPG		1006517040

NO	PART NAME	Q'TY	MATERIAL	NOTE	PART NO.
17	HEAXGON SOCKET BOLT w/t SPRING WASHER	4	SUS304	1/2"-13X3/4"	
16	COUNTER SUNK HEAD BOLT	4	S435	M10X25	
15	EYEBOLT	4	SUS304	M12X20	
14	SET SCREW	1	S435	M6X10	
13	SET SCREW	2	S435	M8X10	
12	HEAXGON HEAD BOLT w/t SPRING WASHER w/t PLAIN WASHER	8	SUS304	M10X110	
11	O. RING	1	FKM	G55	1004711502
10	O. RING	1	FKM	G85	1004711503

NO	PART NAME	Q'TY	MATERIAL	NOTE	PART NO.

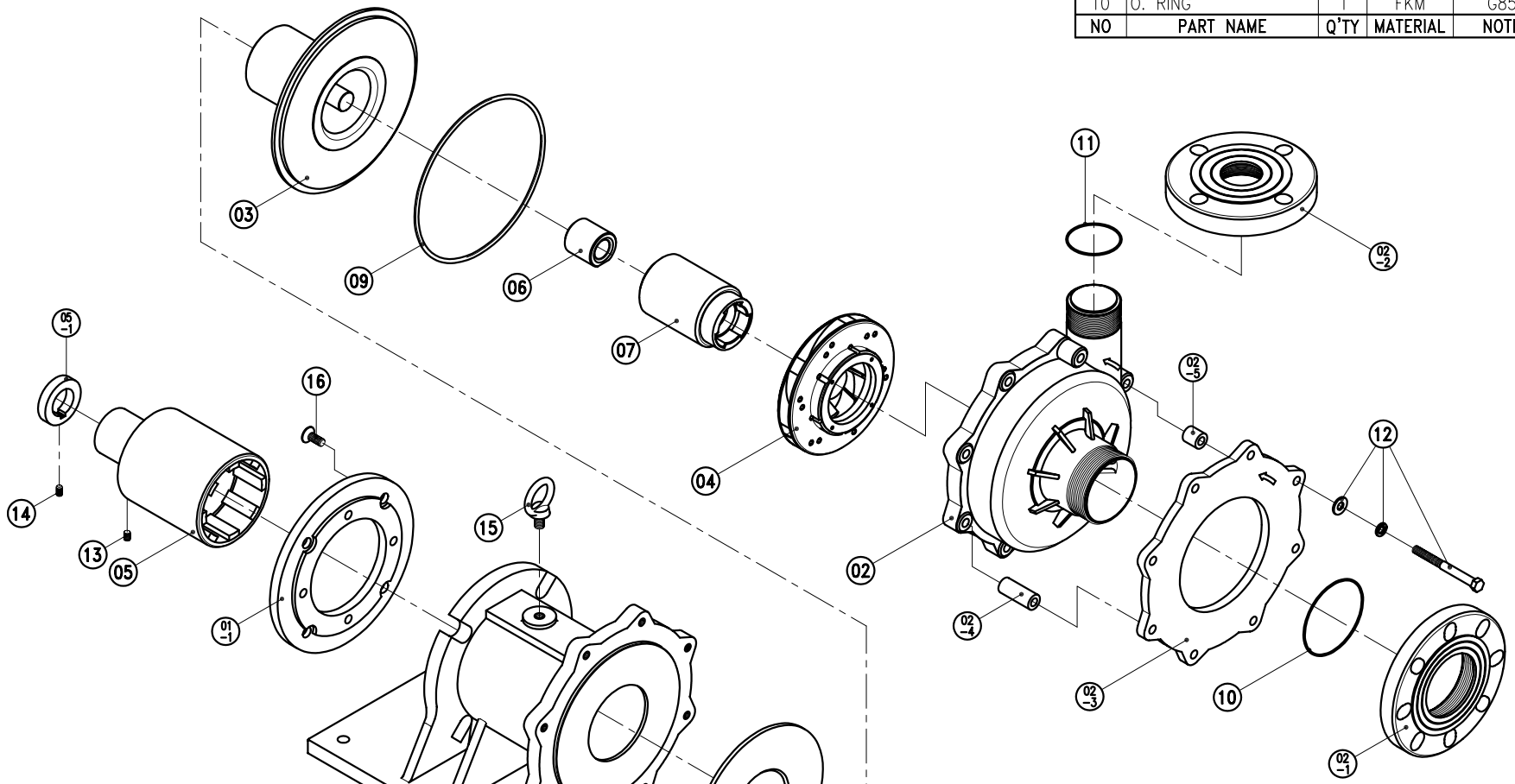

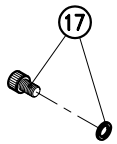

MOTOR

		APPROVED		MDL, NAME	NH-655PW (NEMA)
UNIT	INCH	CHECK	05 03 05	DWG, NAME	DECOMPOSITION DRAWING
SCALE	3:20	DESIGN	03 28 00	DWG, NO.	E3653052 A3
EDITION	3	DR.BY	05 03 05 BECKY		

TPW
HONG YUAN

PAN WORLD CO.,LTD.
パンワールド 株式会社