NO	PART NAME	Q'TY	MATERIAL	NOTE	DWG. NO.
04	IMPELLER ASS'Y	1	PPG		A2403783
03-4	O. RING	1	FKM	ø19.8Xø2.4	P20
03-3	SPINDLE	1	CERAMIC	ø20X65	A2333759
03-2	REAR THRUST PAD	1	CERAMIC	ø36X6.5	P2329095
03-1	SPINDLE HOLDER	1	ETFE	ø40X68	
03	REAR CASING	1	PPG	ø174X92.5	A2303781
2D	GASKET	1	FKM	293X218X4.5	A9423725
2C	TELESCOPIC PIECE	1	PPG	286X211X68	A2273726
2B-5	SEELVE	1	SUS304	ø14X75	A9123755
2B-4	SEELVE	6	SUS304	ø14X89	
2B-3	SCREW	3	SUS304	M8X15	A9123754
2B-2	FILTER	1	PPG	164X77X60	A2273729
2B-1	THRUST PAD	1	CERAMIC	ø58X8.5	P2229092
2B	REAR CASING CHAMBER	1	PPG	368X226X99	A2273719
2A-2	FILLER CAP	1	PPG	ø55X30	A2279236
2A-1	DRAIN CAP	1	PPG	ø36X24	A2233731
2A	FRONT CASING CHAMBER	1	PPG	342X226X152	A2273789
02	SELF-PRIMING CHAMBER	1	PPG		
01	BRACKET	1	FC-20	ø195X145	A2123766

NO	PART NAME	Q'TY	MATERIAL	NOTE	DWG. NO.
13	HEXAGON SOCKET BOLT w/t S.W.(M8) w/t P.W.(ø17Xø8.4Xt1.6)	6	SUS304	M8X145	
12	O. RING	1	FKM	ø19.8Xø2.4	P20
11	O. RING	1	FKM	ø34.4Xø3.1	G35
10	O. RING	1	FKM	ø49.4Xø3.1	G50
09	O. RING	1	FKM	ø159.3Xø5.7	G160
08	BACK UP RING	1	SUS304	ø150X5.5	P2119054
07-1	INNER MAGNET	1	FERRITE	ø76X44.5	P2449101
07	INNER DRIVE RING	1	PPG	ø79.6X71	A2433786
06-1	BEARING	1	CARBON	ø32X28	P2469771
06	BEARING ASS'Y	1	ETFE	ø44X31	A2463788
05-1	RING	1	S45C	ø37.5X17.5	P2579332
05	OUTER DRIVE RING	1	ADC-12	ø117.5X119	P2509330
04-3	IMPELLER COVER	1	PPG	ø124X18	P2459052
04-2	MOUTH RING	1	RULON	ø52X7	P2429098
04-1	IMPELLER NOUMENON	1	PPG	ø124X33	P2419051

NO	PART NAME	Q'TY	MATERIAL	NOTE	DWG. NO.
20	HEXAGON SOCKET BOLT w/t S.W.(3/8")(MOTOR)	4	SUS304	3/8"-16X1"	
19	SET SCREW	2	S435	M6X10	P9116430
18	SET SCREW	2	S435	M8X10	P9119160
17	NUT w/t P.W.(ø17Xø8.4Xt1.6)	7	SUS304	M8	
16	HEXAGON HEAD BOLT w/t S.W.(M8) w/t P.W.(ø17Xø8.4Xt1.6)	3	SUS304	M8X30	
15	HEXAGON SOCKET BOLT w/t S.W.(M8) w/t P.W.(ø17Xø8.4Xt1.6)	6	SUS304	M8X70	
14	HEXAGON SOCKET BOLT w/t S.W.(M8) w/t P.W.(ø17Xø8.4Xt1.6)	1	SUS304	M8X130	

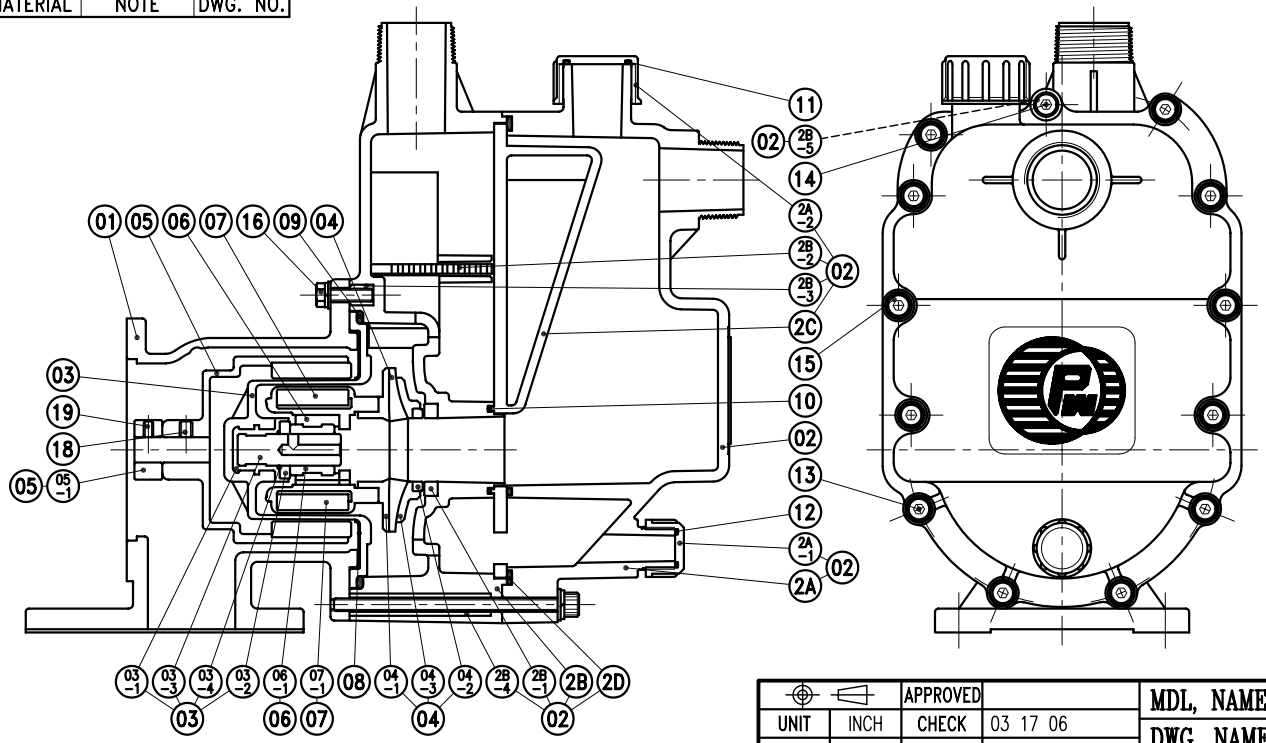

		APPROVED		MDL, NAME	NH-400PW-N-CV (NEMA)
UNIT	INCH	CHECK	03 17 06	DWG, NAME	CONSTRUCTION DRAWING
SCALE	3:10	DESIGN	10 19 05	DWG, NO.	E2403624 A3
EDITION	1	DR.BY	03 17 06 BECKY		

TPW
HONG YUAN

PAN WORLD CO.,LTD.
パンワールド 株式会社